SONY

4-480-528-**32**(2)

FM/AM Clock Radio

Operating Instructions

NO POWER NO PROBLEM

* 4 4 8 0 5 2 8 3 2 * (2)

©2014 Sony Corporation Printed in China

http://www.sony.net/

ICF-C1T

Before operating the unit, please read this guide thoroughly and retain it for future reference.

For customers in Europe
Register now for free updates at :
www.sony-europe.com/myproducts

WARNING

To reduce the risk of fire, do not cover the ventilation of the apparatus with newspapers, tablecloths, curtains, etc. And do not place lighted candles on the apparatus.
To reduce the risk of fire or electric shock, do not expose this apparatus to dripping or splashing, and do not place objects filled with liquids, such as vases, on the apparatus.

Do not install the appliance in a confined space, such as a bookcase or built-in cabinet.

Do not expose batteries or apparatus with battery-installed to excessive heat such as sunshine, fire or the like.

As the main plug is used to disconnect the unit from the mains, connect the unit to an easily accessible AC outlet. Should you notice an abnormality in the unit, disconnect the main plug from the AC outlet immediately.

The unit is not disconnected from the AC power source (mains) as long as it is connected to the wall outlet, even if the unit itself has been turned off.

The nameplate and important information concerning safety are located on the bottom exterior.

CAUTION

Danger of explosion if battery is incorrectly replaced. Replace only with the same type.

This symbol is intended to alert the user to the presence of important operating and maintenance (servicing) instructions in the literature accompanying the appliance.

.

Disposal of waste batteries and electrical and electronic equipment (applicable in the European Union and other European countries with separate collection systems)

This symbol on the product, the battery or on the packaging indicates that the product and the battery shall not be treated as household waste. On certain batteries this symbol might be used in combination with a chemical symbol. The chemical symbols for mercury (Hg) or lead (Pb) are added if the battery contains more than 0.0005% mercury or 0.004% lead. By ensuring these products and batteries are disposed of correctly, you will help prevent potentially negative consequences for the environment and human health which could otherwise be caused by inappropriate waste handling. The recycling of the materials will help to conserve natural resources.
In case of products that for safety, performance or data integrity reasons require a permanent connection with an incorporated battery, this battery should be replaced by qualified service staff only. To ensure that the battery and the electrical and electronic equipment will be treated properly, hand over these products at end-of-life to the applicable collection point for the recycling of electrical and electronic equipment. For all other batteries, please view the section on how to remove the battery from the product safely. Hand the battery over to the applicable collection point for the recycling of waste batteries. For more detailed information about recycling of this product or battery, please contact your local Civic Office, your household waste disposal service or the shop where you purchased the product or battery.

WARNING

- Battery may explode if handled incorrectly. Do not recharge, disassemble or dispose of in fire.
- Dispose of used battery promptly and in accordance with local environmental laws and guidelines. Keep away from children.

License and Trademark Notice

No Power No Problem™ is a trademark of Sony Corporation.

Precautions

- Operate the unit on the power sources specified in "Specifications."
- To disconnect the power cord (mains lead), pull it out by the plug, not the cord.
- Do not leave the unit in a location near a heat source, such as a radiator or airduct, or in a place subject to direct sunlight, excessive dust, mechanical vibration, or shock.
- Allow adequate air circulation to prevent internal heat build-up. Do not place the unit on a surface (a rug, blanket, etc.) or near materials (a curtain) that might block the ventilation holes.
- Should any solid object or liquid fall into the unit, unplug the unit and have it checked by a qualified personnel before operating it any further.
- To clean the casing, use a soft dry cloth. Do not use any type of solvent, such as alcohol or benzine, which may damage the finish.
- Do not connect the antenna lead to the external antenna.

NOTES ON LITHIUM BATTERY

- Dispose of used battery promptly. Keep the lithium battery out of the reach of children. Should the battery be swallowed, immediately consult a doctor.
- Wipe the battery with a dry cloth to assure a good contact.
- Be sure to observe the correct polarity when installing the battery.
- Do not hold the battery with metallic tweezers, otherwise a short-circuit may occur.
- Do not expose the battery to excessive heat such as direct sunlight, fire or the like.

If you have any questions or problems concerning your unit, please consult your nearest Sony dealer.

General information

Troubleshooting

Should any problems persist after you have made the following checks, consult your nearest Sony dealer.

The clock flashes "0:00" or "AM 12:00" after a power interruption.

- The battery is discharged. Remove the old battery and insert a new one.

Unsatisfactory reception

- Extend the FM wire antenna fully to increase reception sensitivity.

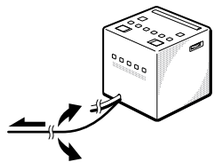

- Rotate the unit horizontally for optimum reception. A ferrite bar AM antenna is built into the unit.

- Do not operate the unit over a steel desk or metal surface, as this may lead to interference.

The radio or buzzer alarm does not sound at the preset alarm time.

- Check that "A" or "B" appears on the display.

The radio alarm is activated but no sound is emitted at the preset alarm time.

- Adjust the volume using **VOLUME +/–**.

When daylight saving time (summer time) begins, the clock does not switch to daylight saving time (summer time) automatically. (UK model only)

- Make sure the clock is set correctly.
- When "Aut → On" appears on the display after pressing and holding **DST** for more than 3 seconds, the Automatic DST/summer time function becomes active.

Specifications

Time display

UK model: 24-hour system
Australian and New Zealand models: 12-hour system

Frequency range

Band	Frequency
FM	87.5 MHz – 108 MHz
AM	531 kHz – 1,602 kHz

Speaker

Approx. 6.6 cm dia., 8 Ω

Power output

115 mW (at 10% harmonic distortion)

Power requirements

230 V AC, 50 Hz
For power backup: 3 V DC, one CR2032 battery

Dimensions

Approx. 101 mm × 102 mm × 101 mm (w/h/d) including projecting parts and controls

Mass

Approx. 530 g including CR2032 battery

Design and specifications are subject to change without notice.

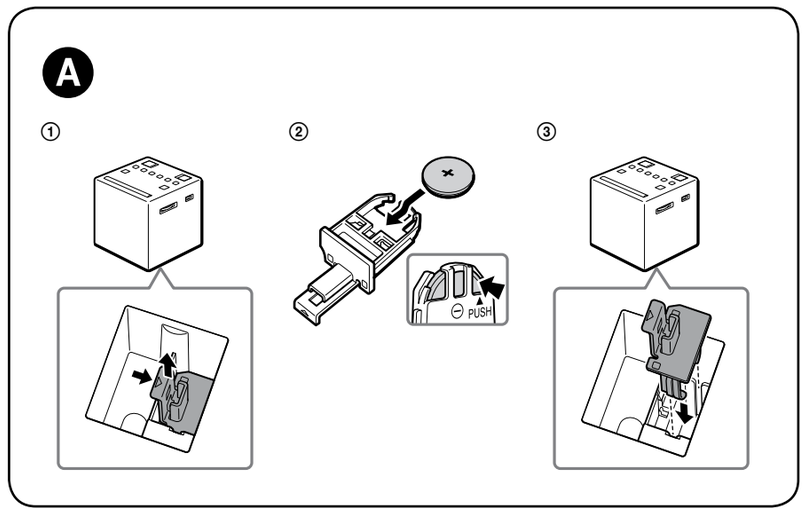

About the battery as a backup power source

This unit contains a CR2032 battery as a backup power source to keep the clock and the alarm operating during a power interruption. (No Power No Problem system)

NO POWER NO PROBLEM

When to replace the battery

When the battery is discharged, "" appears on the display.
If a power interruption occurs while the battery is discharged, the current time and alarm will be erased.

Note for customers in the UK

- The clock is preset at the factory, and its memory is powered by the preinstalled Sony CR2032 battery. If the "0:00" flashes on the display when the unit is connected to AC outlet for the first time, the battery may be discharged. In this case, consult a Sony dealer. The preinstalled CR2032 battery is considered part of the product, and is covered by the warranty. You are required to show "Note for customers in the UK" (in this instruction) to a Sony dealer in order to validate the warranty for this product.

Replacing the backup battery

1. Keep the AC plug connected to the wall outlet and remove the battery compartment on the bottom of the unit by pulling it up while sliding the tab. (See Fig. A-①.)
2. Insert a new battery into the battery compartment with the ⊕ side facing up.
   To remove the battery from the battery compartment, push it out from the side marked **PUSH**. (See Fig. A-②.)
3. Insert the battery compartment back into the unit along the groove and push it from above until it clicks. (See Fig. A-③.)
   The tab locks the battery compartment.
4. Press **RADIO** to remove "" from the display.

Notes

- When you replace the battery, do not disconnect the AC plug from the wall outlet. Otherwise, the current date, current time and alarm will be erased.
- If the unit will be left unplugged for a long time, remove the battery to avoid any damage that may be caused by leakage or corrosion.

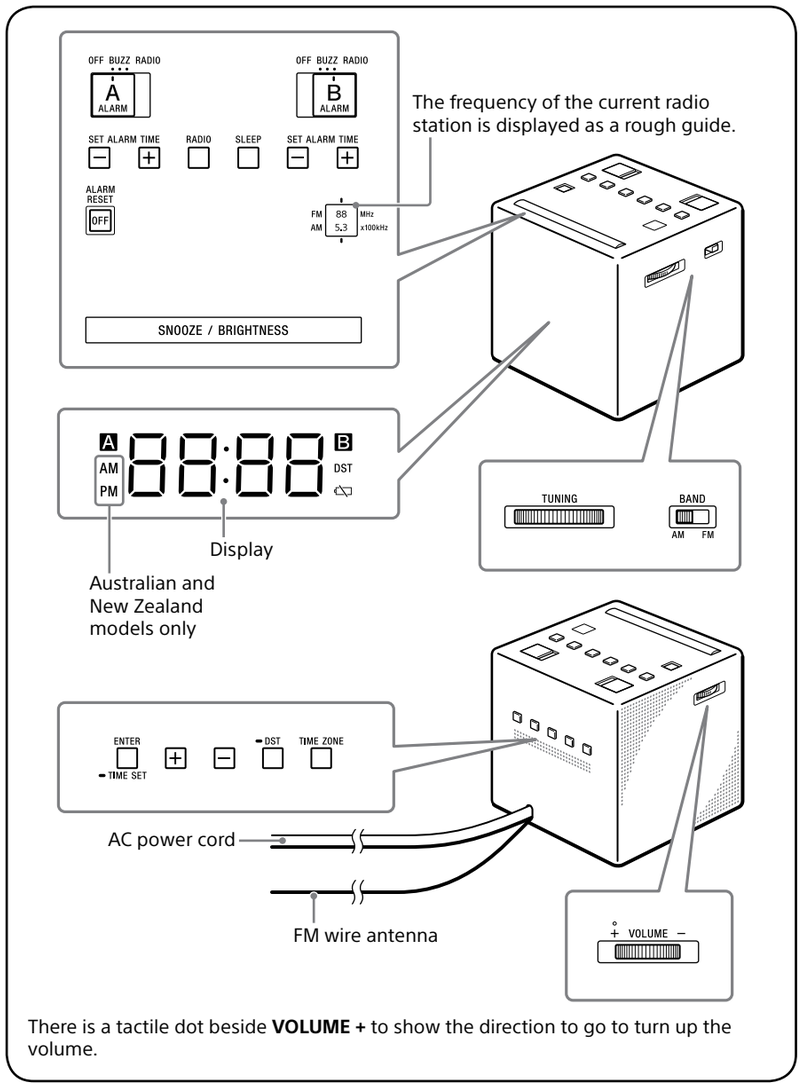

There is a tactile dot beside **VOLUME +** to show the direction to go to turn up the volume.

Getting Started

Connecting to an AC power source

Connect the AC power cord to a wall outlet.

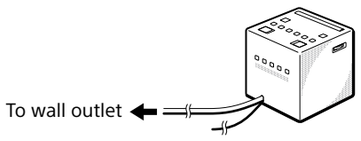

For UK model

The current WET (Western European Time) appears on the display.
(This unit is preset to the current date and time at the factory, and is powered by the back-up battery.)

If you live in a country/region other than in the Western European Time zone

1 Press **TIME ZONE**.
Area number "0" appears on the display.

2 Press **TIME ZONE** repeatedly to select a number as follows:

Area number	Time zone
0 (default)	Western European Time
1	Central European Time
2	Eastern European Time
3	Gulf Standard Time
4	Hong Kong Time

The clock display switches to the current time of selected time zone in about 4 seconds.

If you live in a country/region other than in these time zones

Refer to "Setting the clock manually" to set the correct time.

Note

- During shipment and your first use, a clock error may occur. In this case, refer to "Setting the clock manually" to set the correct time.

About Automatic DST/summer time adjustment (UK model only)

This unit automatically adjusts for daylight saving time (summer time). "DST" automatically appears on the display at the beginning of daylight saving time (summer time), and disappears at the end of daylight saving time (summer time).
The Automatic DST/summer time adjustment is based on GMT (Greenwich Mean Time).

- Daylight saving time (summer time) begins at 1:00 AM on the final Sunday of March.
- Standard time begins at 2:00 AM on the final Sunday of October.

Note

- The implementation of DST/summer time and its beginning/ending date and time are subject to circumstances and laws in each country/region. Should this interfere with the desired adjustment, cancel the Automatic DST/summer time adjustment and set the clock manually as necessary. Customers living in a country/region that does not use daylight saving time (summer time) should cancel the Automatic DST/summer time adjustment before using the unit.

To cancel Automatic DST/summer time adjustment

The Automatic DST/summer time adjustment can be canceled.

Press and hold **DST** for more than 3 seconds while the clock is displayed.

A beep sounds, and "Aut → OFF" appears on the display to show that the Automatic DST/summer time adjustment has been canceled. The clock display returns.

To reactivate Automatic DST/summer time adjustment

Press and hold **DST** for more than 3 seconds. A beep sounds, and "Aut → On" appears on the display to show that Automatic DST/summer time adjustment has been activated. The clock display returns.

Operations

Setting the clock manually

To change the clock setting manually, operate the unit as follows.

1 Press and hold **ENTER/TIME SET** for more than 2 seconds.
You will hear a beep and the last two digits of the year will start to flash on the display.

2 Press **+** or **–** repeatedly to select the year, and then press **ENTER/TIME SET**.

3 Repeat step **2** to set the month, day and time.
After setting the time, two short beeps will sound and the seconds will start incrementing from zero.

Note

- If you do not press any button for about 1 minute while setting the clock, clock setting mode will be canceled.

To change the display to indicate daylight saving time (summer time)

For UK model

Change the clock setting manually to the daylight saving time (summer time) if you have canceled the Automatic DST/summer time adjustment.

For Australian and New Zealand models

Change the daylight saving time (summer time) adjustment setting according to the following procedure.

Press and hold **DST** for more than 3 seconds.

"DST" appears on the display and the clock display switches to daylight saving time (summer time).
To deactivate the daylight saving time (summer time) adjustment, press and hold **DST** for more than 3 seconds again.

Playing the radio

1 Press **RADIO** to turn on the radio.

2 Set **BAND** to the desired band (**AM** or **FM**).

3 Tune to the desired station using **TUNING**.

4 Adjust the volume using **VOLUME +/–**.
To turn off the radio, press **ALARM RESET/OFF**.

Setting the alarm

The dual alarm function allows you to set two alarm programs (**ALARM A** and **ALARM B**).
An alarm time can be set for each program and the alarm sound can be selected from **RADIO** (radio) or **BUZZ** (buzzer).

Before setting the alarm

- Make sure to set the clock. (See "Setting the clock manually.")
- To set the radio alarm, first tune to a station and adjust the volume. (See "Playing the radio.")

To set the alarm

1 Set **ALARM A** (or **B**) to the desired alarm sound (**RADIO** or **BUZZ**).

When setting **ALARM A**

The alarm time appears for a few seconds, and then "A" (or "B") appears on the display. (It does not appear when the switch is set to **OFF**.)

2 Press **SET ALARM TIME +** or **–** repeatedly to set the desired time while the alarm time appears on the display.

While setting the alarm time, "A" (or "B") flashes on the display.

When the alarm time setting operation is complete, the clock display returns after a few seconds and "A" (or "B") changes from flashing to fully lit.
At the set time, the radio will turn on, or the buzzer will sound gradually increasing in volume. ("A" (or "B") flashes on the display.)

To stop the alarm

Press **ALARM RESET/OFF** to turn off the alarm.

The alarm will sound again at the same time the next day.

To doze for a few more minutes

Press **SNOOZE/BRIGHTNESS**.

The sound turns off, but will automatically come on again after about 10 minutes.
Each time you press **SNOOZE/BRIGHTNESS**, the snooze time changes as follows:

10 → 20 → 30 → 40 → 50 → 60

The display shows the snooze time for about 4 seconds and returns to show the current time. ("A" (or "B") flashes on the display.)

To deactivate the alarm

Set **ALARM A** (or **B**) to **OFF**.

"A" (or "B") disappears from the display.

Notes

- The alarm time setting cannot be changed if **ALARM A** (or **B**) is set to **OFF**. If **SET ALARM TIME +** or **–** is pressed, "OFF" appears on the display for about 0.5 seconds.
- If a second alarm sounds during a first (or the snooze function is active), the second alarm takes priority.
- **ENTER/TIME SET**, **DST**, and **TIME ZONE** are unavailable while the alarm is sounding or the snooze function is turned on.
- If the same alarm time is set for both **ALARM A** and **ALARM B**, **ALARM A** takes priority.
- If no operation is performed while the alarm is sounding, the alarm will stop after about 60 minutes.
- The alarm function works as usual on the first and last day of daylight saving time (summer time). When Automatic DST/summer time adjustment is set, if the alarm is set for a time that is skipped when daylight saving time (summer time) begins, the alarm is skipped, or if the alarm is set for a time that overlaps the end of daylight saving time (summer time), the alarm sounds twice.

Notes on the alarm in the event of a power interruption

In the event of a power interruption, the alarm functions work until the battery is fully discharged. But certain functions will be affected as follows:

- The display will disappear.
- If the alarm sound is set to **RADIO**, it will be changed to **BUZZ** automatically.
- If the power returns while the alarm is sounding, the alarm sounds continuously for about 60 minutes when the power returns.
- The alarm buzzes for about one minute, stops temporarily, and buzzes again after about five minutes if neither **SNOOZE/BRIGHTNESS** nor **ALARM RESET/OFF** is pressed while the alarm is buzzing.
  If the alarm buzzes and stops (either automatically after 1 minute or by pressing **SNOOZE/BRIGHTNESS**) five times, the alarm is automatically reset in the case of a power interruption. The alarm will buzz for 30 minutes after power is restored if it is restored within 60 minutes of the alarm time.
- If you press **SNOOZE/BRIGHTNESS** while the alarm is sounding, the snooze time is set to 10 minutes. During a power failure, the snooze time cannot be set to more than 10 minutes.
- If "" appears on the display, the alarm will not sound in the event of a power interruption. Replace the battery if "" appears.

Setting the sleep timer

You can fall asleep to the radio using the sleep timer, which turns off the radio automatically after a preset duration.

Press **SLEEP**.

The radio turns on. Each time you press **SLEEP**, the duration (in minutes) changes as follows:

90 → 60 → 30 → 15 → OFF

The radio will play for the duration you set, then shut off.
To deactivate the sleep timer, press **SLEEP** repeatedly to set the sleep timer to "OFF."

To turn off the radio before the preset time

Press **ALARM RESET/OFF**.

To use both the sleep timer and alarm

You can fall asleep to the radio and also be awakened by the radio or buzzer alarm at the preset time.

Set the alarm, then set the sleep timer.

Note

- When the alarm is set to sound during the sleep timer duration, the sleep timer will be deactivated automatically when the alarm sounds.

Setting the brightness of the display

Three levels of brightness are available.

Press **SNOOZE/BRIGHTNESS**.

Each time you press **SNOOZE/BRIGHTNESS**, the brightness of the display changes as follows:

High (default) → Middle → Low

Note

- When the alarm is sounding or the snooze function is active, the brightness of the display cannot be changed.